PWS10/15SS-i

Economic Light Duty Electric Stacker

INTRODUCTION

- PWSS-i Series full electric stacker with STAXX patent Multifunctional Intelligent Handle, an ideal and budget-affordable model to replace semi-electric stacker and manual stacker in the market, bringing a highly efficient and effortless pallet stacking.

UNIQUE SALES POINTS

- Patent STAXX Multifunctional Intelligent Handle (Unique Point)
  Unique in the market, quick error detecting, easier service, less service time, lower labor cost.
  I. Vehicle operation status display
  Up/down/forward/backward
  Working hour/battery capacity display
  II. Quick Error detecting
  Error code display
  III. All maintenance information visualized
  Quick error locating.

STAXX
www.staxxmhe.com

ELECTRIC STACKER

- Turtle and Rabbit Speed shift by one button.

- Long Tiller Arm handle design for easy steering and comfortable operation.
- Metal cover replacing plastic one for longer life time.

- Remote Control
  Unique in the market, ideal for goods picking on trailers. With a simple remote device, the operator can control forks lifting and lowering to any suitable working height, saving efforts with high efficiency.

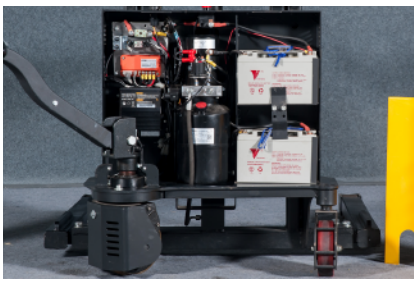

- Well organized wiring harness, durable with almost zero wearing.
- Built-in Charger for easy charging.

- Safety Speed Control
  Traveling speed automatically declines to 2km/h when forks are lifted to over 500mm, to avoid misoperation and ensure better safety.

- Light senor interlock switch, reliable quality.

SPECIFICATIONS

MODEL			PWS10SS-i						PWS15SS-i					
CHARACTERISTICS														
1.1	Drive unit		Electric						Electric					
1.2	Operator type		Walkie						Walkie					
1.3	Capacity	Q kg	1000						1500					
1.4	Load center distance	C mm	500						500					
1.5	Wheel base	Y mm	1255						1255					
WEIGHT														
2.1	Service weight(with battery)	kg	410	440	460	480	510	530	430	460	480	500	520	540
2.2	Service weight(without battery)	kg	360	390	410	430	460	480	380	410	430	450	470	490
WHEEL														
3.1	Tyre type drving wheels/loading wheels		PU						PU					
3.2	Size of loading wheels	Φd1 mm	φ100						φ100					
3.3	Size of driving whee	ΦD mm	φ210						φ210					
3.4	Size of balance wheel	Φd2 mm	φ180						φ180					
3.5	Wheel quantity	pcs	4						4					
SPECIFICATIONS														
4.1	Lift height	H1 mm	1600	2000	2500	3000	3300	3500	1600	2000	2500	3000	3300	3500
4.2	Mast lower height	H2 mm	2110	1550	1800	2050	2200	2275	2110	1550	1800	2050	2200	2275
4.3	Mast extend height	H3 mm	2110	2516	3016	3516	3816	4016	2110	2516	3016	3516	3816	4016
4.4	Overall length	L mm	1670						1670					
4.5	Inner width of fork leg	W1 mm	970/1110/1250						970/1110/1250					
4.6	width of fork leg	W2 mm	90						90					
4.7	Fork length	slell mm	1070						1070					
4.8	Outer width of the fork	W3 mm	200~800						200~800					
4.9	Lowered height of fork	H4 mm	70						70					
4.10	Clearance	H5 mm	30						30					
4.11	Aisle width for pallets (1000 x 1200mm)	Ast mm	2270						2270					
4.12	Aisle width for pallets (800 x 1200mm)	Ast mm	2200						2200					
4.13	Min turning radius	Wa mm	1405						1405					
PERFORMANCE														
5.1	Travelling speed, laden/unladen	km/h	4.5/4.7						4.5/4.7					
5.2	Lifting speed, laden/unladen	mm/s	115/160						115/160					
5.3	Lowering speed, laden/unladen	mm/s	170/130						170/130					
5.4	Max. gradeability,laden/unladen	%	5/7						5/7					
5.5	Service brake type		Electronic						Electronic					
ELECTRIC ENGINE														
6.1	Driving motor	kw	0.75						0.75					
6.2	Lifting motor	kw	2.2						2.2					
6.3	Battery voltage/capacity	V/Ah	12/75Ah x 2						12/75Ah x 2					
6.4	Battey size	mm	(260×172×170)×2						(260×172×170)×2					
6.5	Controller		STAXXA6101						STAXXA6101					

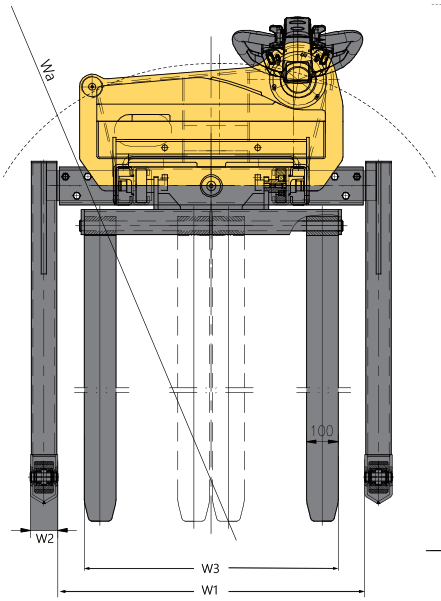

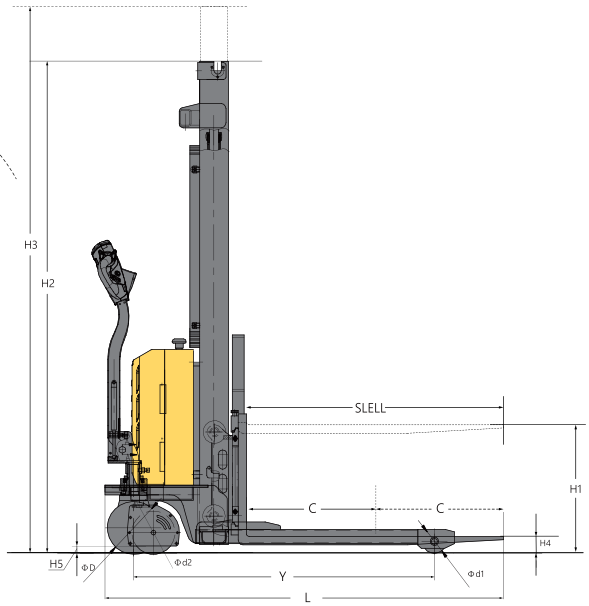

LOAD CHART **PWS10SS-i**

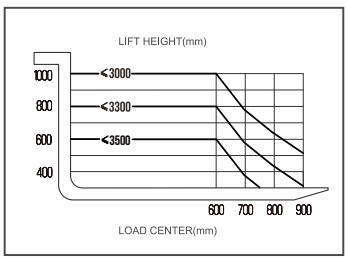
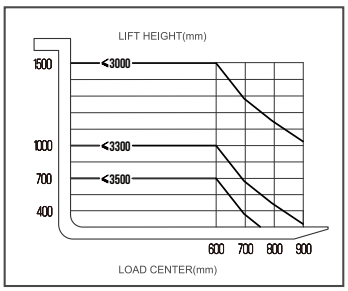
LOAD CHART **PWS15SS-i**